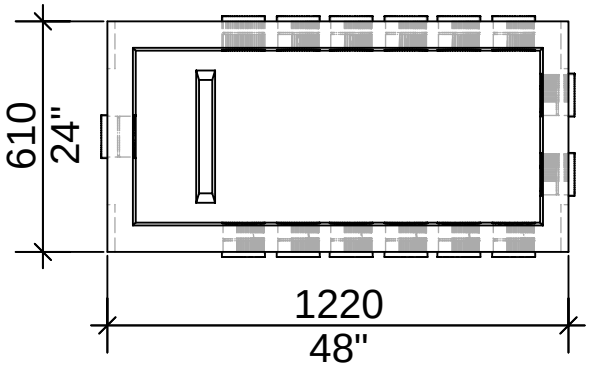

Top View

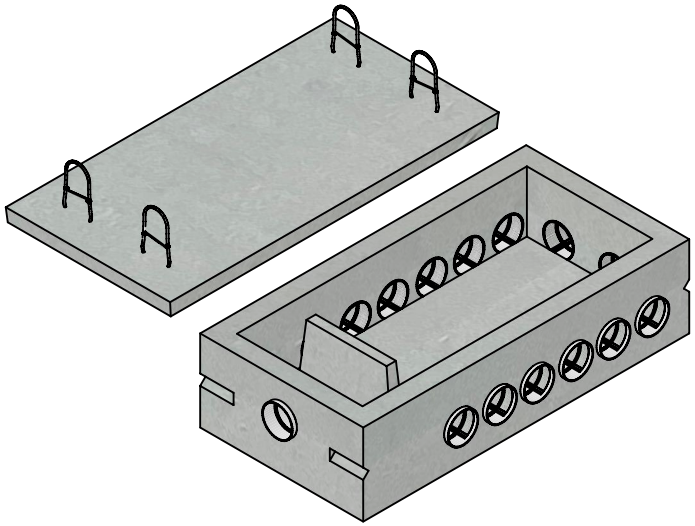

Isometric View

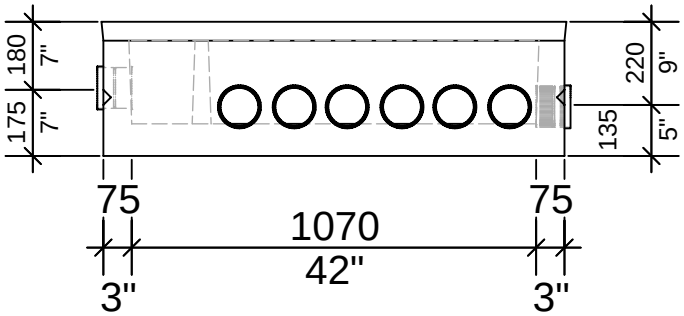

Side View

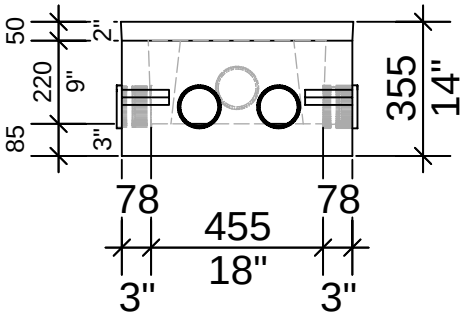

End View

NEWMARKET PRE-CAST
Solid For 60 Years

20 Victoria St
Uxbridge, ON L9P 1N4
Tel: 905-852-6111
Toll Free: 1-800-263-1297
Fax: 905-852-4340
Info@Newmarketprecast.com
Newmarketprecast.com

14 Outlet Distribution Box

Lid Weight - 90Kg 198Lbs
Base Weight - 262Kg 578Lbs

- Distribution box is a one piece unit. Top is sealed with a fibrous mastic sealant
- Cast with 45 MPA strength concrete at 7 days with 5-7% air
- 3.0 Kg. structural fibre added to concrete. ASTM C 1116
- Lid reinforced with 10m rebar.
- Non-sulphate resistant concrete
- One 100mm Inlet and fourteen PVC Outlets suitable for 4" pipe
- Baffle to reduce water velocity and create even distribution